ECO SERIES

LiFePO4 Lithium Battery

Powered by TOMMATECH GmbH

GERMAN-based company

User Manual

ECO SERIES LFP BATTERY

CONTENTS

SAFETY PRECAUTIONS

WARNING:

Failure to follow the instructions and safety rules contained in this manual may result in death or serious injury. Read, understand and follow the safety rules and operating instructions carefully before using the lithium battery. Avoid dangerous situations. Always carry out an inspection before making a connection. Use the lithium battery only for its intended purpose. Read, understand and comply with all legal regulations. Receive the training to use the lithium battery safely.

WARNING:

- Please read the datasheet specifications and user manual carefully before using or testing the lithium battery. Otherwise, you may encounter situations such as heating, loss of efficiency, short circuit, electrical malfunction, etc.
- Use the necessary equipment (insulating gloves, protective goggles, protective clothing, recommended hand tools) when installing the lithium battery.
- Do not puncture the lithium battery, throw it from a high place or apply physical force to it.
- Do not intervene with the lithium battery except by an authorized service.
- Do not disconnect the connector connections when any load is connected to the lithium battery or when current is being drawn. Use a circuit breaker.
- Do not open and intervene inside the lithium battery and do not reverse the polarity of the battery.
- Do not draw current from the lithium battery above the capacity of the battery.
- Make sure that the lithium battery connectors are fully inserted and not loose.

- Do not throw the lithium battery from high places or hit it with any object such as a pickaxe or shovel.
- Do not expose the lithium battery to high current or voltage.
- Avoid contact of the lithium battery with liquid, do not leave the battery in watery, humid environments and do not immerse it in liquid.
- Do not expose the lithium battery to high temperatures.
- Use the lithium battery away from sunlight, fire, heaters or materials containing high temperatures.
- Do not use direct alternating current power supply for charging the lithium battery.
- Do not charge the lithium battery with alternating current directly from the mains line without using a rectifier.
- Do not store the lithium battery near fire or heating sources.
- Do not connect lithium batteries in series.
- Do not use different type, different capacity batteries when making parallel electrical connection of the products.
- Do not use the lithium battery with unsuitable energy sources.
- Protect the case of the lithium battery from any physical impact.
- Do not permanently fix the lithium battery terminals. Use a circuit breaker suitable for the voltage and current ratings so that the battery can be disconnected in a dangerous situation.
- Do not attempt to disassemble or modify the lithium battery.
- Do not place the lithium battery in a microwave oven or a pressurized container.
- Place the lithium battery properly in the area where it will be used.
- Do not continue to use the lithium battery in risky situations..

1. ECO SERIES LITHIUM BATTERY INTERFACE DEFINITIONS

1.1. ECO Series Lithium Battery Device Front Interface

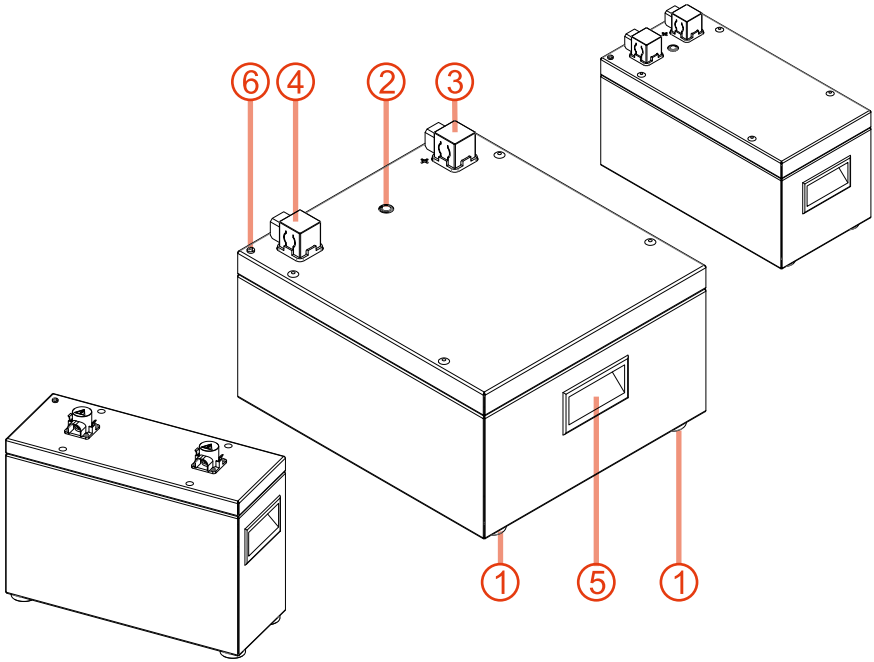

NO	NAME	DESCRIPTION
1	Leveling Feet	Plastic feet separating the lithium battery from the floor.
2	On/Off Button	Main switch button. It must be switched to the on position when using the lithium battery.
3	(-) Connectors	Lithium battery negative power connectors.
4	(+) Connectors	Lithium battery positive power connectors.
5	Plastic Handle	Lithium battery carrying handles.
6	Grounding	Ground connection terminal M4.

1.2. ECO Series Lithium Battery General Dimensions

1.2.1. ECO-LFP-12V-60Ah

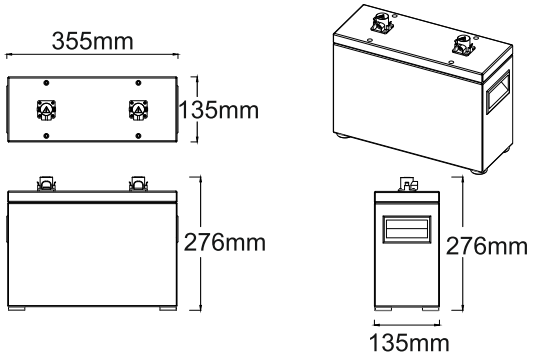

1.2.2. ECO-LFP-12V-100Ah

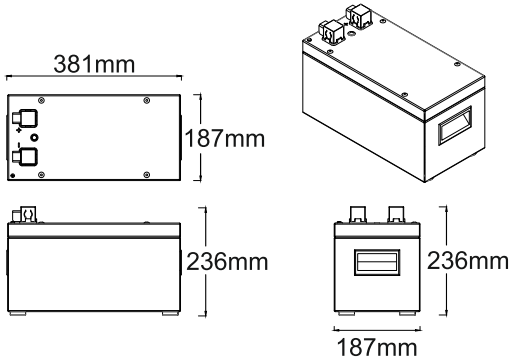

1.2.3. ECO-LFP-12V-200Ah & ECO-LFP-24V-100Ah

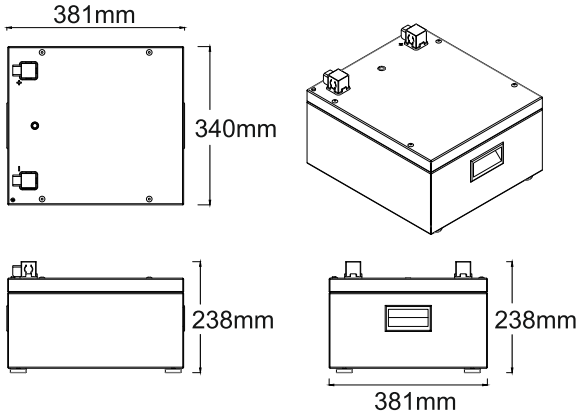

1.3. ECO Series Lithium Battery Warning Label

WARNING HIGH VOLTAGE INSIDE	ÖNEMLİ UYARI YÜKSEK VOLTAJ İÇERİR

- **Please read the user manual before installing and operating the Lithium Battery.**
  Lityum Bataryayı kurulum yapmadan ve çalıştırmadan önce lütfen kullanım kılavuzunu okuyun.
- **Do not drop or expose the Lithium Battery to any impact during use or relocation.**
  Lityum Bataryayı kullanım sırasında veya yer değişikliği esnasında düşürmeyin ve herhangi bir darbeye maruz bırakmayın.
- **Please do not open and touch your product in case of malfunction. Otherwise, the lithium battery will be out of warranty.**
  Lütfen arıza anında ürününüzü açmayın ve müdahale etmeyin. Aksi taktirde lityum batarya garanti kapsamı dışında kalır.
- **Do not immerse the device in water. Keep away from safety risk environments with flammable liquids, gases and dust.**
  Cihazı suya batırmayın. Yanıcı sıvılar, gazlar ve tozların bulunduğu güvenlik riski bulunan ortamlardan uzak tutun.
- **Do not step on the lithium battery and do not put any material on the device.**
  Lityum Batarya üzerine kesinlikle basmayın ve cihazın üzerine herhangi bir malzeme koymayın.
- **Do not pierce, hit or throw the lithium battery from a high place. Do not use in high pressure, high temperature, water contact environments.**
  Lityum bataryayı delmeyin, vurmayın, yüksek yerden atmayın. Yüksek basınç, yüksek sıcaklık, su ile temaslı ortamlarda kullanmayın.
- **Please keep your device out of the reach of children and animals.**
  Lütfen cihazınızı çocukların ve hayvanların ulaşamayacağı yerde saklayın.
- **When cleaning the Lithium Battery, turn off your device and clean it with a dry cloth.**
  Lityum Bataryayı temizleme esnasında cihazınızı kapatın ve kuru bez ile temizleyin.
- **Store the Lithium Battery under the storage conditions specified in the user manual.**
  Lityum Bataryayı kullanım kılavuzunda yer alan depolama koşullarında saklayın.
- **In case of any problem with your product, please contact the authorized service.**
  Ürününüzde herhangi bir problem ile karşılaşılması durumunda lütfen yetkili servis ile iletişime geçin.

! EMERGENCIES !	! ACİL DURUMLAR !

- **If your battery is leaking, flowing or damaged, turn off your device and do not continue to use it.**
  Bataryanızda sızıntı, akıntı veya hasar var ise cihazınızı kapatın ve kullanmaya devam etmeyin.
- **Do not touch liquid leaking from your battery.**
  Bataryanızdan sızan sıvıya temas etmeyin.
- **Never use water in case of fire.**
  Herhangi bir yangın durumunda kesinlikle su kullanmayın.
- **Use special fire extinguishers containing carbon dioxide or dry chemical powder.**
  Karbondioksitli veya kuru kimyevi toz içeren özel yangın söndürücüler kullanın.

1.4. ECO Series Lithium Battery Product Labels

1.4.1. ECO-LFP-12V-60Ah Lithium Battery Product Label

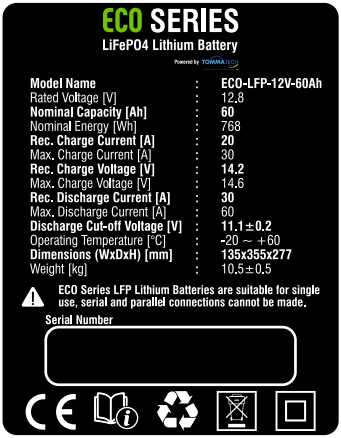

ECO SERIES
LiFePO4 Lithium Battery
Powered by TOWMATECH

Model Name	:	**ECO-LFP-12V-60Ah**
Rated Voltage [V]	:	12.8
Nominal Capacity [Ah]	:	**60**
Nominal Energy [Wh]	:	768
Rec. Charge Current [A]	:	**20**
Max. Charge Current [A]	:	30
Rec. Charge Voltage [V]	:	**14.2**
Max. Charge Voltage [V]	:	14.6
Rec. Discharge Current [A]	:	**30**
Max. Discharge Current [A]	:	60
Discharge Cut-off Voltage [V]	:	**11.1±0.2**
Operating Temperature [°C]	:	-20 ~ +60
Dimensions (WxDxH) [mm]	:	**135x355x277**
Weight [kg]	:	10.5±0.5

ECO Series LFP Lithium Batteries are suitable for single use, serial and parallel connections cannot be made.

Serial Number

1.4.2. ECO-LFP-12V-100Ah Lithium Battery Product Label

ECO SERIES
LiFePO4 Lithium Battery
Powered by TOMMATECH

Model Name	:	**ECO-LFP-12V-100Ah**	Max. Charge Voltage [V]	:	14.6
Rated Voltage [V]	:	12.8	**Rec. Discharge Current [A]**	:	**50**
Nominal Capacity [Ah]	:	**100**	Max. Discharge Current [A]	:	100
Nominal Energy [Wh]	:	1280	**Discharge Cut-off Voltage [V]**	:	**11.1±0.2**
Rec. Charge Current [A]	:	**30**	Operating Temperature [°C]	:	-20 ~ +60
Max. Charge Current [A]	:	50	**Dimensions (WxDxH) [mm]**	:	**188x237x382**
Rec. Charge Voltage [V]	:	**14.2**	Weight [kg]	:	15.5±0.5

ECO Series LFP Lithium Batteries are suitable for single use, serial and parallel connections cannot be made.

Serial Number

1.4.3. ECO-LFP-12V-200Ah Lithium Battery Product Label

ECO SERIES
LiFePO4 Lithium Battery
Powered by TOMMATECH

Model Name	:	**ECO-LFP-12V-200Ah**
Rated Voltage [V]	:	12.8
Nominal Capacity [Ah]	:	**200**
Nominal Energy [Wh]	:	2560
Rec. Charge Current [A]	:	**30**
Max. Charge Current [A]	:	50
Rec. Charge Voltage [V]	:	**14.2**
Max. Charge Voltage [V]	:	14.6
Rec. Discharge Current [A]	:	**50**
Max. Discharge Current [A]	:	100
Discharge Cut-off Voltage [V]	:	**11.1±0.2**
Operating Temperature [°C]	:	-20 ~ +60
Dimensions (WxDxH) [mm]	:	**340x382x239**
Weight [kg]	:	28.5±0.5

ECO Series LFP Lithium Batteries are suitable for single use, serial and parallel connections cannot be made.

Serial Number

1.4.4. ECO-LFP-24V-100Ah Lithium Battery Product Label

ECO SERIES
LiFePO4 Lithium Battery
Powered by TOMMATECH

Model Name	:	**ECO-LFP-24V-100Ah**
Rated Voltage [V]	:	25.6
Nominal Capacity [Ah]	:	**100**
Nominal Energy [Wh]	:	2560
Rec. Charge Current [A]	:	**30**
Max. Charge Current [A]	:	50
Rec. Charge Voltage [V]	:	**28.4**
Max. Charge Voltage [V]	:	29.2
Rec. Discharge Current [A]	:	**50**
Max. Discharge Current [A]	:	100
Discharge Cut-off Voltage [V]	:	**22.4±0.2**
Operating Temperature [°C]	:	-20 ~ +60
Dimensions (WxDxH) [mm]	:	**340x382x239**
Weight [kg]	:	28.5±0.5

ECO Series LFP Lithium Batteries are suitable for single use, serial and parallel connections cannot be made.

Serial Number

2.INSTALLATION

2.1. Security

* The lithium battery must be installed by persons who have been trained in electrical and wiring work and have sufficient knowledge of battery and power systems.

* You must wear the following protective equipment when installing the lithium battery system.

Protective Insulating Gloves

Protective Goggles

Safety Shoes

2.2. Tools

* The tools and measuring instruments that can be used during installation are listed below.

Screwdriver
Electric Drill
Torque Wrench
Flush Cutter
Current Meter
Voltmeter
Insulation Tape
Temperature Meter
Pliers
User Manual

2.3. Installation Steps

2.3.1. STEP 1: Remove the contents of the box carefully from the product packaging and make sure that the contents of the product are complete. Please keep the product packaging carefully for future warranty /technical service cases.

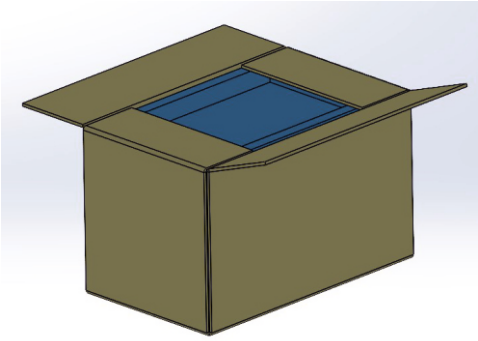

Şekil 1

2.3.2. STEP 2: Determine the place where the battery will be installed and position it on the ground by holding the chrome handles on the side of the device. (Figure 2)

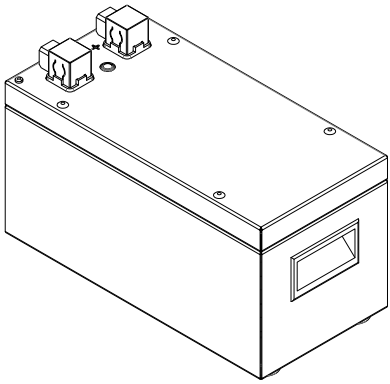

Şekil 2

2.3.3. STEP 3: Make sure that the battery is switched off (the LED on the button will be off). Press and hold the switch for 5 seconds to turn it off. Remove the negative and positive terminal covers on the top of the device. (Figure 2-1)

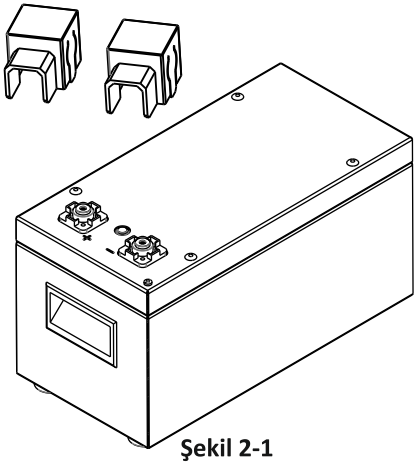

Şekil 2-1

2.3.4. STEP 4: Remove the M8 bolts on the negative and positive connection terminals of the lithium battery with the help of a wrench without making contact with each other. (Figure 2-2)

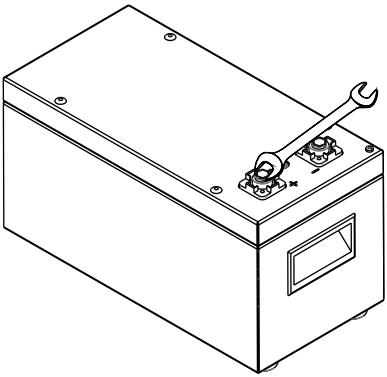

Şekil 2-2

2.3.5. STEP 5: Make sure that the current and voltage values of the electronic device (inverter, charge controller, etc.) you will use with the lithium battery are suitable.

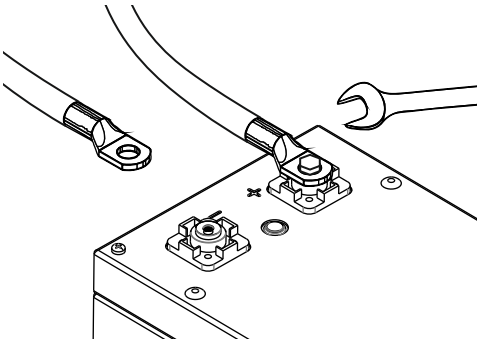

Şekil 2-3

2.3.6. STEP 6: Make sure that the negative and positive power cables of the electronic device you will use with the lithium battery are connected to the negative and positive terminal connections on the battery. Attach it with the help of a wrench using M8 bolts with the correct colors as shown in Figure 2-3.

2.3.7. STEP 7: Replace the terminal covers to protect the negative and positive terminal connections on the lithium battery. (Figure 2-4)

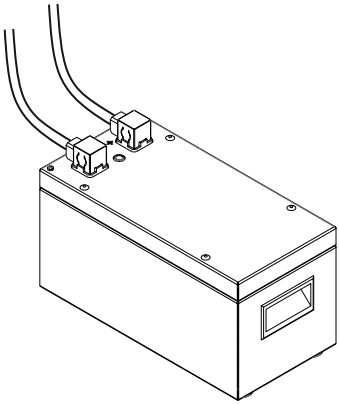

Şekil 2-4

2.3.8. STEP 8: To activate the lithium battery, press the ON/OFF button once. Observe that the LED light on the button is on. Press and hold the button for 5 seconds to turn off the lithium battery.

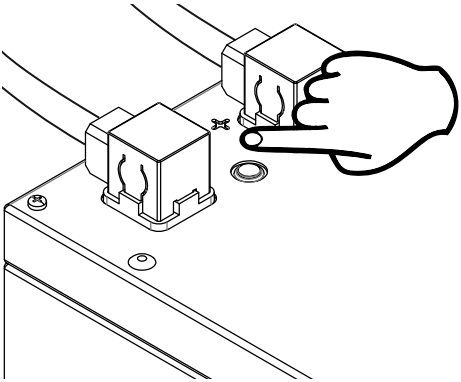

Şekil 2-5

3. LITHIUM BATTERY CONNECTION TYPES

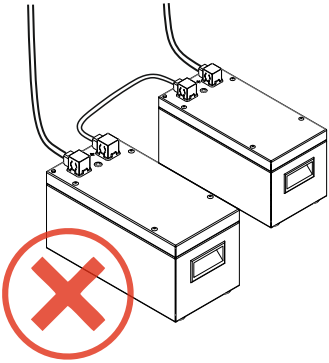

Series Connection

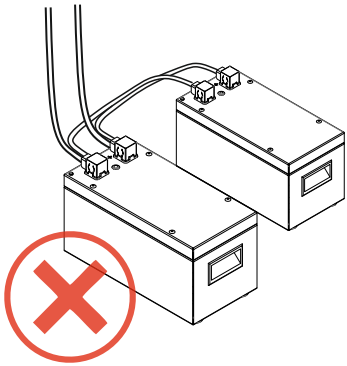

Parallel Connection

NOTE: Lithium battery is not suitable for series and parallel connection. When selecting the device, choose the model suitable for the capacity value. Otherwise capacity cannot be increased!

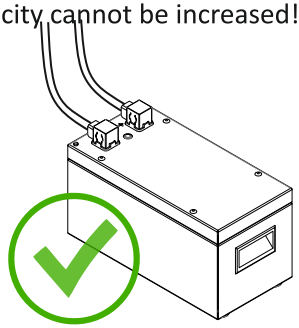

Suitable Structure for Single Use

4. ECO SERIES LITHIUM BATTERY TECHNICAL AND PHYSICAL SPECIFICATIONS

4.1. Voltage Capacity

	ECO-LFP-12V-60Ah	ECO-LFP-12V-100Ah	ECO-LFP-12V-200Ah	ECO-LFP-24V-100Ah
Nominal Voltage [V]	12.8	12.8	12.8	25.6
Nominal Capacity [Ah]	60	100	200	100
Nominal Energy [Wh]	768	1280	2560	2560
Recommended Charging Current [A]	20	30	30	30
Maximum Charge Current [A]	30	50	50	50
Recommended Charging Voltage [V]	14.2	14.2	14.2	28.4
Maximum Charge Voltage [V]	14.6	14.6	14.6	29.2
Recommended Discharge Current [A]	30	50	50	50
Maximum Discharge Current [A]	60	100	100	100
Discharge Cut-off Voltage [V]]	11.1±0.2	11.1±0.2	11.1±0.2	22.4±0.2

4.2. Cycle Specifications (at 25°C)

%100 D.O.D	2000 Cycle
%50 D.O.D	3400 Cycle
%30 D.O.D	4800 Cycle

4.3. Safety and Standarts

Overcharge Protection	Yes
Overdischarge Protection	Yes
Overcurrent Protection	Yes
Short Circuit Protection	Yes
Overtemperature Protection	Yes
Temperature Sensor	Yes
Adjustable Charge / Discharge Current	Yes
Grounding	Yes
Cell Type	LFP 32700 Cylindrical
Safety Standards	IEC 61960 / 62133-2

4.4. Environmental Conditions

Charging Temperature [°C]	0 ~ +60
Discharge Temperature [°C]	-20 ~ +60
Storage Temperature [°C]	0 ~ +35
Humidity (Non-Condensing) [%]	Max. 95%
Protection Class	IP65
Design Life [Year]	>10
Warranty [Year]	5

4.5. Additional Information

Dimensions (WxDxH) [mm]	135x355x277	188x237x382	340x382x239	340x382x239
Weight [kg]	10.5±0.5	15.5±0.5	28.5±0.5	28.5±0.5
Battery Connector	M8 Connection Terminal			
Series Connection	No			
Parallel Connection	No			
Casing Material	Metal Case			

5. ECO SERIES LITHIUM BATTERY TEST SPECIFICATIONS

5.1. Electrical Performance Test

ITEM	TEST PROCEDURE	RESULT
Nominal Voltage	i) 12.8V Measurement of the average voltage during battery operation ii) 25.6V Measurement of the average voltage during battery operation.	i) 12.8V ii) 25.6V
Discharge Performance nce	i) The time it takes for the battery with full capacity to drop from 12.8V to 10V with standard discharge current ii) The time it takes for the battery with full capacity to drop from 25.6V to 20V with standard discharge currenten süre.	i) ≥117min ii) ≥117min
Storage	i) Measurement of voltage loss of 12.8V battery after 1 month at 25±5°C ii) Measurement of voltage loss of 25.6V battery after 1 month at 25±5°C	i) ≥12.3V ii) ≥25.1V
Number of Cycles (2000 Cylces)	Measurement of the availability of 80 percent of its capacity at 100% bottom discharge at 25±5°C with standard charging (30A) and discharging current (50A)	≥80%

5.2. Safety Test

ITEM	TEST PROCEDURE	RESULT
Short Circuit	A cable with a resistance of less than 5mΩ was connected to the positive and negative poles of the battery at full capacity and a short circuit condition was observed for 10 minutes. As a result of the test, the highest temperature of the battery was 138°C and no burning or explosion was observed.	No combustion or explosion was observed.
Drilling and Impact	When the battery was fully charged, an impact test was performed with a steel needle with a diameter between Ø3mm and Ø8mm and a speed between 10 mm/s and 40 mm/s. As a result of the test, it was observed that the outer layer of the battery was punctured and the voltage values decreased to zero.	No combustion or explosion was observed.
Overchargi ng	With 1C, the battery was discharged in an environment with a temperature of 25°C ± 5°C until a voltage of 0V was reached. No combustion and explosion were observed as a result of the test.	No combustion or explosion was observed.
Thermal Shock	After the battery was fully charged with 1C, it was placed in a box with a dry environment and kept in an environment with a temperature of 150°C ± 2°C for half an hour.	No combustion or explosion was observed.

6. TRANSPORT

- Pack the lithium battery with insulation and shockproof material to prevent physical damage.
- Be careful when loading and unloading the product during transportation. Do not discard the batteries and do not expose them to physical impact/collision.
- Never transport lithium batteries together with flammable or explosive objects or sharp metal products.
- To transport lithium batteries, lift them by the handles with at least two people.

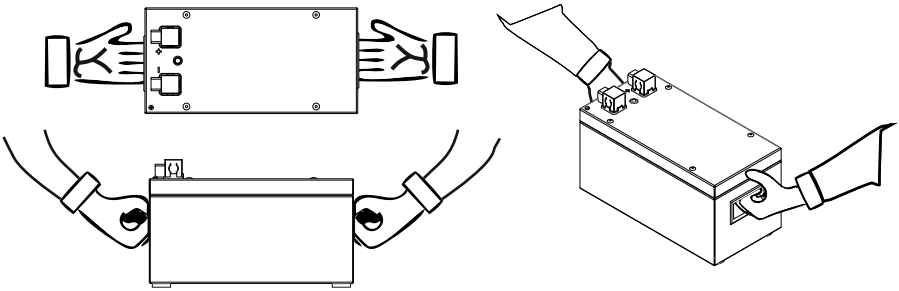

- Follow the 6 rules of occupational health and safety in manual lifting and transportation:

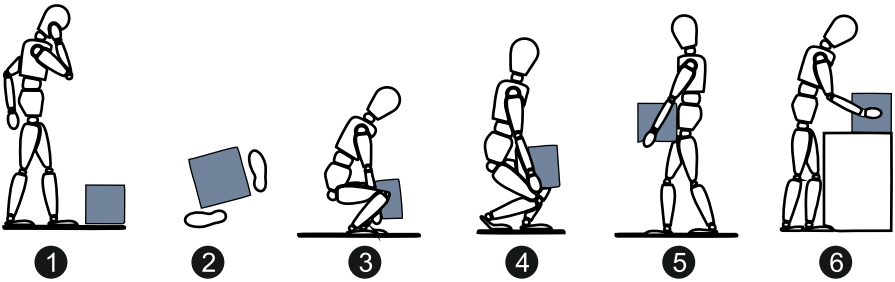

1. Recognize the burden.
2. Approach asymmetrically.
3. Bend down springing on the knees.
4. Grasp the load diagonally and stay on the knees.
5. Rotate with the feet, keeping the load close to the body.
6. Putting the load in place.

7. MAINTENANCE

- If the lithium battery is rarely used, perform a maintenance charge or charge the battery regularly.
- If the lithium battery is not used for a long period of time, check the voltage. If the measured voltage is lower than the nominal operating voltage, charge the battery.
- The lithium battery does not need to be filled with any liquid. Therefore, never attempt to open or tamper with the battery. Opened or tampered products are not covered by the warranty.

8. PACKAGING

Cells/LFP Batteries are 40% - 60% charged when packaged. The high security LiFePO4 box will contain name, type, nominal voltage, quantity, gross weight, date, capacity and impedance on the surface.

9. ADVANCED BATTERY MANAGEMENT SYSTEM (BMS)

In lithium battery applications, the BMS, also called battery management system, is the component that ensures the safety and control of the battery throughout the charging and discharging processes of the battery packs. The BMS continuously monitors and manages the battery's overcharge/discharge, high current, high/low voltage and high temperature operations. In addition, it performs inter-cell voltage and charge balancing, allowing the battery to be used at high performance for a long time.

10. WARRANTY EXCLUSIONS

- Damages caused by transportation of the batteries.
- Damages caused by intervention other than authorized service.
- Damages caused by reverse connection of battery polarity.
- Damages caused by drawing more current from the battery than the battery discharge current capacity.
- Damage caused by charging the battery by applying more current than the maximum charging current capacity of the battery.
- Damage caused by charging the battery by applying more voltage than the battery maximum charging voltage specified in the user manual.
- Damages caused by charging the battery by applying more voltage than the maximum charging voltage of the battery specified in the user manual.
- Damages caused by short-circuiting the battery poles.
- Damage caused by contacting the positive (+) and negative (-) terminals of the battery with metal objects.
- Malfunctions and errors in the product due to faulty assembly, maintenance, repair and disassembly by unauthorized persons.
- Damages caused by the battery connectors not being fully inserted.
- Damages caused by opening and intervening in the battery other than authorized service.
- Damage caused by dropping the battery from a high place.
- Damage caused by hitting the battery with any object such as a pickaxe or shovel.
- Damage caused by connecting the batteries in series.
- Damage caused by exposing the battery to high current or voltage.
- Damage caused by contact of the battery with any liquid.
- Damage caused by leaving or using the battery in excessively humid environments.
- Damage caused by exposing the battery to temperatures higher or lower than the values specified in the user manual.
- Damage caused by using the battery in a manner other than that specified in the user manual.
-

- Damage caused by direct exposure of the battery to sunlight, fire, heaters or materials containing high temperatures.
- Damage caused by connecting the battery directly to alternating current devices without using an inverter device.
- Damage caused by direct power supply to electrical or electronic devices such as televisions and washing machines.
- Damages caused by using direct alternating current source for battery charging.
- Damages caused by continuing to use the battery in any risky condition.
- Damages caused by the battery remaining below the nominal operating voltage for a long time.
- Damages caused by keeping and using the battery near fire or heating sources.
- Damages caused by using batteries of different types, different capacities and different production dates during parallel electrical connection of the batteries.
- Damages caused by exposure of the battery to any physical impact.
- Damages caused by disconnecting the connector connections while any load is connected to the battery or while drawing current.

WARRANTY CERTIFICATE

Title: TOMMATECH GMBH
Headquarters:
Address: Bürgerplatz 5 - 85748 Garching Munich / Germany **Phone: +49 89 1250 36 860** **E-mail: mail@tommatech.de**
Authorized Technical Service:
Address: Antalya Organized Industrial Zone 1st Section Atatürk Bulvarı No:20 Döşemealtı - Antalya - Türkiye **Phone: + 90 242 229 00 54** **Phone: 444 20 02** **Fax:+ 90 242 229 00 74**

Seller Company Information	
Title	
Address	
Telephone	
Email	
Invoice Date and Number	
Delivery Date and Place	
Authorized Signature	
Company Stamp	

Product Information	
Product Model	
Product Serial No.	
Warranty Period:	5 YEARS (60 MONTHS)
Maximum Repair	Time: 20 Working Days

Note: In order for your device sent to our company to be considered under warranty (during the warranty period of the product), no hardware must not be interfered with, it must not be damaged, the warranty label must not be torn / damaged and the product must be returned in its original packaging. If the above mentioned points are not taken into consideration, your device will be considered within the scope of unauthorized interference and will be deemed out of warranty.

ECO SERIES

LiFePO4 Lithium Battery

Powered by TOMMATECH